# LOADS, UNIT: PREPARATION OF SEMIPERISHABLE SUBSISTENCE ITEMS

Unit Loads: This DSCP form covers general requirements for unitization and containerization of semiperishable subsistence items for the Directorate of Subsistence.

Classification: The unit loads shall be designated by one of the following types and the contractors shall adhere to the requirements within unless otherwise specified in the solicitation/contract, or purchase order.

Type I - Palletized unit load
Class A - Strapped or film bonded
Class B - Capped and strapped

Type II – Containerized unit load
Class E – Capped and strapped fiberboard box.

Type III - Commercial loads
Class G - On commercial pallet

Intended use. This specification covers general and detailed requirements for unitization and containerized semiperishable subsistence items. The following information is furnished to indicate the established levels of protection:

a. Level A protection: Solicitation/Contract specific.

b. Level B protection: Type I, Class A load, Type I, Class B load, or Type II, Class E load

c. Minimal Military Requirements/Commercial: Type III, Class G load.

Reference Documents.

(1). Pallets and Construction

ASME MH1b-2000; Part 3, Wood Pallets and Part 9, Wood Pallets for Military Use

Unitization Guidelines

MIL-HDBK-774 – Palletized Unit Loads

DSCP FORM 3507 April 1, 2002
THIS DOCUMENT SUPERSEDES DSCP FORM 3507 DECEMBER 1, 1998
PREPARING ACTIVITY: DSCP-SS

(2). Fiberboard

ASTM-D4727 - Corrugated and Solid Fiberboard Sheet Stock (Container Grade) and Cut Shapes

ASTM-D5168 - Containers, Fabrication and Closure of Triple Wall Corrugated Fiberboard

(3). Strapping

ASTM-D3950 - Strapping, Nonmetallic (and Joining Methods)

(4). Marking

DSCP Form 3556 - Marking Instructions for Shipping Cases, Sacks, and Palletized/Containerized Loads of Perishable and Semi-Perishable Subsistence

(5). Sampling and Test Procedures

ANSI/ASQC Z.1-4 - Sampling Procedures and Tables for Inspection by Attributes

General Requirements

Pallets. Unless otherwise specified herein, or by contract, pallets shall conform to Part 3 and Part 9 of ASME MH1b–2000. Pallets shall be Class 1, Type 2, Style 6, Size 2. For pallet loads under 1500 pounds, ref. Part 9, Table 4, ASME Part No. MH1/9-02SW4048. For pallet loads 1501 to 3000 pounds, ref. Part 9, Table 4, ASME Part No. MH1/9-05SW4048.

Pads. When specified in specification sheets, top and bottom pads shall be fabricated from fiberboard conforming to class weather-resistant of ASTM D4727. Alternatively, in lieu of a bottom fiberboard pad, a moisture barrier material fabricated from 4 mil or thicker commercial polyethylene film may be used. The pad or barrier material shall be approximately the same size as the load base, except the top fiberboard pad shall not extend beyond sides and ends of the load.

Consolidation box. Boxes shall be triple wall fiberboard. The contents shall fit snugly in the box; the maximum void space shall be not more than five percent of the capacity. The maximum dimensions of the boxes, maximum net weight of contents and size shall be as specified in Table I.

TABLE I. Maximum dimensions and net weight of contents of consolidation box

| Maximum outside dimensions in inches | | | | |
|---|---|---|---|---|
| Length | Width | Height including base | Maximum net weight of contents (pounds) | Box Material |
| 49 | 41 | 43 | 2600 | Fiberboard |

Strapping. Strapping shall be nonmetallic as specified herein.

Nonmetallic strapping. Nonmetallic strapping shall conform to type II or III or IV of ASTM D3950, having a minimum breaking strength of 900 pounds. Buckles shall not be used. When specified in the contract, the strapping on the end item load shall be tested for seal (joint) strength, and shall meet the requirement specified in ASTM D3950, when tested as specified under "Strapping Seal (joint) testing" below.

Formation of load. Shipping containers in each palletized unit load shall be uniformly arranged in a pallet pattern that results in the utilization of at least 80% of the pallets surface area. Pallet pattern guidelines can be found in MIL-HDBK-774. If the contractor cannot achieve required surface area efficiencies, a proposed unit load configuration plan shall be submitted to the contracting officer for approval. Unless otherwise specified, the overall dimensions of the palletized loads shall not exceed 43 inches in length, 52 inches in width, and 43 inches in height (including pallet and cap when required),. (See Table I for consolidation box dimensions). A plus tolerance of 1 inch will be allowed for the height only. The shipping container shall be stacked to form a compact squared load centered on the load base and shall be squared with all corners of the pallet with minimum overhang. The overhang or underhang shall be equalized with the sides and/or ends of the pallets. The shipping containers of each pallet load shall be interlocked by reversing the pattern in each course, except when the containers are of such dimensions as to prohibit interlocking patterns.

Marking. All unit loads shall be marked on two sides in accordance with DSCP Form 3556 or as specified in the contract. Alternatively, when the required markings on one or more individual shipping containers are exposed on two sides of the unit load, a minimum 3 by 5-inch white label shall be applied on the same two sides of the load. The label shall be marked (letter size not less than 1/2 inch) with the quantity (number of units per load), and when required, gross weight, and cube. The values marked for gross weight and cube shall have a tolerance of $\pm$ 3 percent when tested as specified herein under Gross Weight and Cube Testing.

QUALITY ASSURANCE PROVISIONS

Responsibility for inspection. Unless otherwise specified in the contract or purchase order, the contractor is responsible for the performance of all inspection requirements (examinations and tests) as specified herein. Except as otherwise specified in the contract or purchase order, the contractor may use his own or any other facilities suitable for the performance of the inspection requirements specified herein, unless disapproved by the Government. The Government reserves the right to perform any of the inspections set forth in this specification where such inspections are deemed necessary to ensure supplies and services conform to prescribed requirements.

Responsibility for compliance. All items shall meet the requirements of this document. The inspection set forth in this specification shall become a part of the contractor's overall inspection system or quality program. The absence of any inspection requirements in the specification shall not relieve the contractor of the responsibility of ensuring that all products or supplies submitted to the Government for acceptance comply with all requirements of the contract. Sampling inspection, as part of manufacturing operations, is an acceptable practice to ascertain conformance to requirements, however, this does not authorize submission of known defective material, either indicated or actual, nor does it commit the Government to accept defective material.

Quality conformance inspection. Unless otherwise specified, sampling for inspection shall be performed in accordance with ANSI/ASQC Z-1.4.

Component and material inspection. Components and materials shall be inspected in accordance with all the requirements of reference documents unless otherwise excluded, amended, modified, or qualified in this specification or applicable purchase document.

Unit load visual examination. The unit loads shall be examined for the defects listed in Table II. The lot size shall be expressed in units of unitized or containerized unit loads. The sample unit shall be one unitized or containerized unit load. The inspection level shall be S-4 and the AQL, expressed in terms of defects per hundred units, shall be 4.0. In the event that the lot size is less than three, 100 percent inspection shall be performed.

TABLE II. Unit load visual defects

| Examine | Defect |
|---|---|
| Pads (when applicable) | Material not as specified<br>Missing |
| Pallets (when applicable) | Pallet size exceeded<br>Components not as specified<br>Stringers not slotted for straps as specified<br>Unclean 1/ |
| Strapping (when applicable) | Missing, broken, or not as specified<br>Nonmetallic strapping does not indent as specified<br>Buckles used |
| Load formation | Load dimensions exceeded (a plus tolerance of 1 inch is authorized for load height only)<br>Load not squared<br>Overhang or underhang not equalized<br>Not interlocking as required (when applicable) |
| Consolidation box | Size not as specified<br>Void space more than 5 percent of capacity<br>Net weight greater than specified |
| Marking | Not as specified. Missing, Illegible, or incorrect |

Footnote 1/: Pallets shall be free from foreign material and/or growth(s) such as, but not limited to, adhering dirt, filth, mud, mildew, mold, etc.

Unit Load Testing.

Strapping Seal (joint) Testing. When specified, the seal (joint) strength of nonmetallic strapping seals shall be tested in accordance with the breaking strength procedure of ASTM D3950. The sample shall be three seal (joint) specimens taken from the strapping on one unit load selected at random from the lot. Each strapping specimen shall be 48 inches in length with the seal (joint) located at the specimen midpoint. When the average breaking strength of the specimens is less than the requirement, it shall be cause for rejection of the lot.

Gross Weight and Cube testing. The unit load gross weight and cube may be established on an average basis, for marking purposes. The weight and cube average shall be based on a minimum of 5 unit loads. Loads should be stacked (not more than three high) to permit normal compression and settling prior to measurement of cube determination. The lot shall be unacceptable if the average unit load weight and cube marked on the load is less than or exceeds 3.0 percent tolerance.

**NOTE**: Contracting Officer must specify the following in the solicitation/contract:

1. Title, Number and Date of this Form.
2. Type and Class.
3. When height of palletized load is higher than specified.
4. Verification testing as applicable.

Verification testing. Verification testing is mandatory when the type and class unit load specified in the acquisition document is Level A protection.

LOADS UNIT: TYPE I, CLASS A – PALLETIZED, STRAPPED OR FILM BONDED LOAD

REQUIREMENTS:

The unit loads shall have the commodity containers arranged on a pallet with a top and bottom pad, then be strapped with nonmetallic straps as previously specified. The top/bottom pad shall be made of the specified fiberboard. Nonmetallic straps shall be tensioned to indent the edge of the boxes or pad a minimum of ¼ inch without tearing the edge to which applied. Alternatively, each unit load shall be bonded with shrink or stretch film in a manner that reflects the guidelines of MIL-HDBK-774. When stretch film is used, the top of the load shall be covered with a weather-resistant fiberboard pad or covered with a sheet of plastic film. If less than full width film is used, film sections should overlap so as to ensure complete coverage. The top film shall extend down all four sides a minimum of 12 inches. Shrink film will be a bag encapsulated over the entire load and extending at least evenly with the underside of the bottom deck board of the pallet. Stretch wrap film shall be stretched around the load in multiple wraps from the top of the bottom deckboard to not less than 2 inches above the height of the load. When required, specific film thickness shall be specified in solicitation, contract or purchase order. Pads are not required when commodities are packed in V2s fiberboard boxes and shipping container contents are completely protected by internal liners, external V2s sleeves or taped seams. See Figure 1.

QUALITY ASSURANCE PROVISIONS:

The unit loads shall be examined for the applicable defects listed in Table II (page 5). In addition, the defects listed in the following table shall apply.

Additional unit load defects

| Item | Defect |
|---|---|
| Shrink film when used | When cited, material or film thickness not as specified |
| | Not tight, burned through or loosely applied |
| | Not secured under top deck boards of pallet |
| Stretch film when used | When specified, film not correct material or thickness |
| | When specified, number of plies of film not adequate to conform to sum of film thickness requirements |
| | Film not tensioned or secured to deckboards or top of load |
| | Weather resistant fiberboard pad, or plastic film on top of load missing or of insufficient size |
| | Film does not extend a minimum of 2 inches above the height of load |

LOADS UNIT: TYPE I, CLASS B – PALLETIZED, STRAPPED LOAD WITH CAP

REQUIREMENTS:
Cap. The cap shall be flanged, scored, and slotted as shown in Figure 2 and be made of fiberboard conforming to V3c or V2s of ASTM D4727.

The unit load shall have the commodity containers arranged on a pallet and pad, then capped, and strapped with nonmetallic straps as previously specified under General Requirements and as shown in Figure 2. Nonmetallic straps shall be tensioned to indent the edge of the cap a minimum of ¼ inch without tearing the edge of the cap. Pads are not required when commodities are packed in V2s fiberboard boxes and the shipping containers contents are completely protected by internal liners, external V2s sleeves or taped seams. See Figure 2.

QUALITY ASSURANCE PROVISIONS:

The unit loads, shall be examined for the applicable defects listed Table II (page 5). In addition, the defects listed in the following table shall apply.

Additional unit load defects

| Item | Defect |
|---|---|
| Cap | Not material specified |
| | Not in accordance with Figure 2 |

LOADS, UNIT: TYPE II, CLASS E – CONTAINERIZED UNIT LOAD, FIBERBOARD BOX ON PALLET WITH CAP, AND NONMETALLIC STRAPPING ONLY

REQUIREMENTS:

Triple-wall fiberboard box : The tube, including cap, shall be as shown in Figures 3 and 4 and made from fiberboard conforming to ASTM D 5168. The corners of the cap shall not be cut out. The corner flaps shall be secured to the adjacent flanges with five staples as shown in Figure 3. The flaps of the cover shall be crushed prior to stapling. The length of the staple shall penetrate two thicknesses of the fiberboard and be clinched. Alternatively, the triple-wall cap may be secured with a horizontal strap, the same used for strapping the load, applied not more than 4 inches nor less than 2 inches from the bottom edge of the flange. The body of the box may have one or two body joints. The overlap at the body joint shall not be less than 2 inches. The overlapped portion of the body joint of the tube shall be completely crush rolled prior to stapling. When two body joints are used, the joints shall be on diagonally opposite corners of the tube. The metal staples shall be positioned not more than 1-1/2 inches apart. A staple should be placed at 5/8 + 1/8 inch from both ends of the flap. The staple shall have commercial zinc or copper coating. The direction of the flutes in the tube shall be vertical. All bottom flaps of the tube shall be crushed adjacent to the score line. The crushed area of the bottom flaps shall be a minimum of 2-1/2 inches in width by the full length of the flap. The exact depth of the tube shall be determined from the height of the contents. When contents are bagged items, the top course shall be above the edge as shown in Figure 4. The tube shall be fastened to the pallet as shown in Figure 3 with large head galvanized roofing nails or staples. The number of staples shall be double the number of nails as shown in Figure 3. After fastening the tube to the pallet a pad made from fiberboard as specified or of the same material as the tube shall be placed over the bottom flange of the tube.

The containerized unit load shall have the commodity containers arranged in a consolidation box placed on a pallet as previously specified and as shown in Figures 3 and 4. The box shall be closed and strapped with nonmetallic strapping as previously specified and shown in Figure 4. The straps shall be tensioned to indent the edge of the cap a minimum of ¼ inch without tearing the edge of the cap.

QUALITY ASSURANCE PROVISIONS:

The unit loads shall be examined for the applicable defects listed in Table II (page 5). In addition, the defects listed in the following table shall apply.

Additional unit load defects

| Item | Defect |
|---|---|
| Triple-Wall | Not as shown on Figures 3 and 4<br>Fiberboard not as specified<br>Cap corners cut<br>Cap corners not secured as specified<br>Staple does not penetrate fiberboard<br>Box overlap not as specified<br>Triple-wall flap not crush rolled<br>Body joints not on diagonally opposite corners<br>Body joint not secured as specified<br>Protrusion of bagged goods not as specified<br>Tube not secured as specified |

LOADS, UNIT: TYPE III, CLASSES G – COMMERCIAL LOADS, PALLETIZED

REQUIREMENTS:

The unit load shall have the commodity containers arranged on a 40 inch by 48 inch commercial, wood, or plywood partial 4-way entry winged or flush type pallet; or on a 48 inch x 40 inch Grocery Manufacturers of America wood partial 4-way entry pallet. A bottom pad as specified or fabricated from commercial fiberboard shall be utilized. When commercial stringer type pallets are used, strapping slots shall be positioned to permit the load straps to fit snugly against the bottom of the top deck boards. The load shall be bonded with strapping, shrink or stretch film or other means in such a manner as to assure unit load integrity from producer to user.

QUALITY ASSURANCE PROVISIONS

The unit load shall be examined for the applicable defects listed in Table II (page 5). In addition, the defects listed in the following table shall apply.

Additional End Item Defects

| Item | Defect |
|---|---|
| Pallet | Stringers cracked or broken<br>Top deck boards cracked or broken<br>Bottom deck boards cracked, broken or missing<br>Nails not completely driven or protruding |

**NOTES**

Reference documents as cited in this form may be obtained from the following activities:

DSCP FORMS

Defense Supply Center Philadelphia
DSCP-HSL BLDG 6
700 Robbins Ave.
Philadelphia, PA 19111-5092

Phone (215) 737-7772
DSN 444-7772
E-mail mmalason@dscp.dla.mil

For all other documents:

Standardization Documents Order Desk
Defense Automation & Production Service
700 Robbins Ave.
Building 4D
Philadelphia, PA 19111-5094

Phone (215) 697-2179
DSN 442-2179

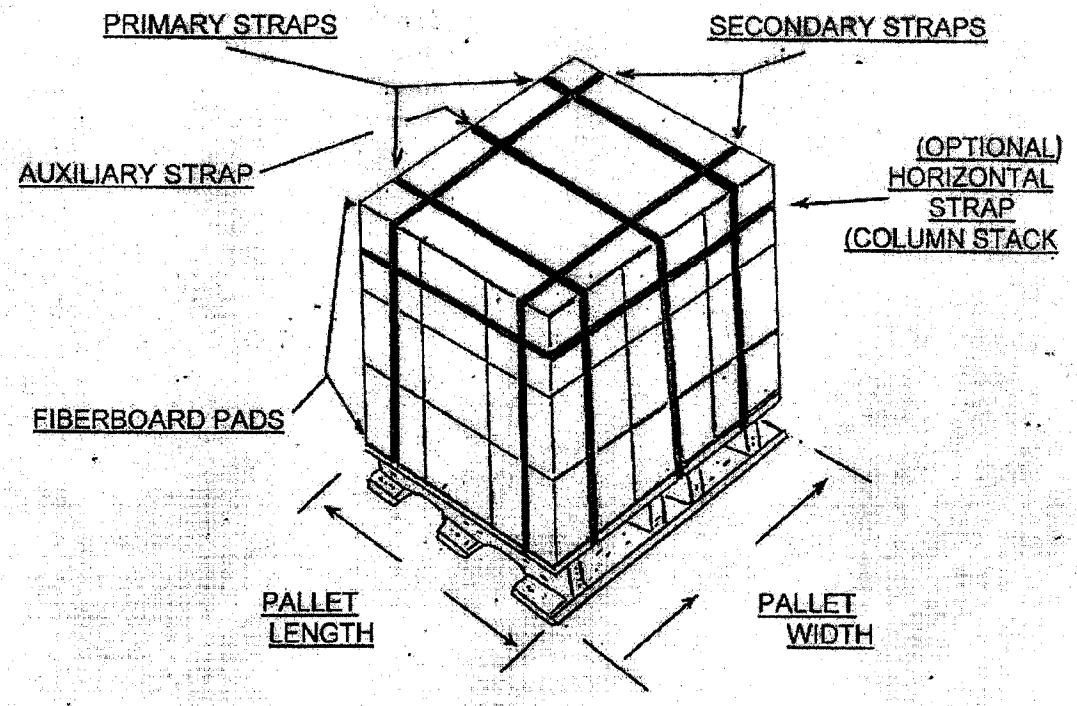


*TYPE I, CLASS A UNIT LOAD*

FIGURE 1

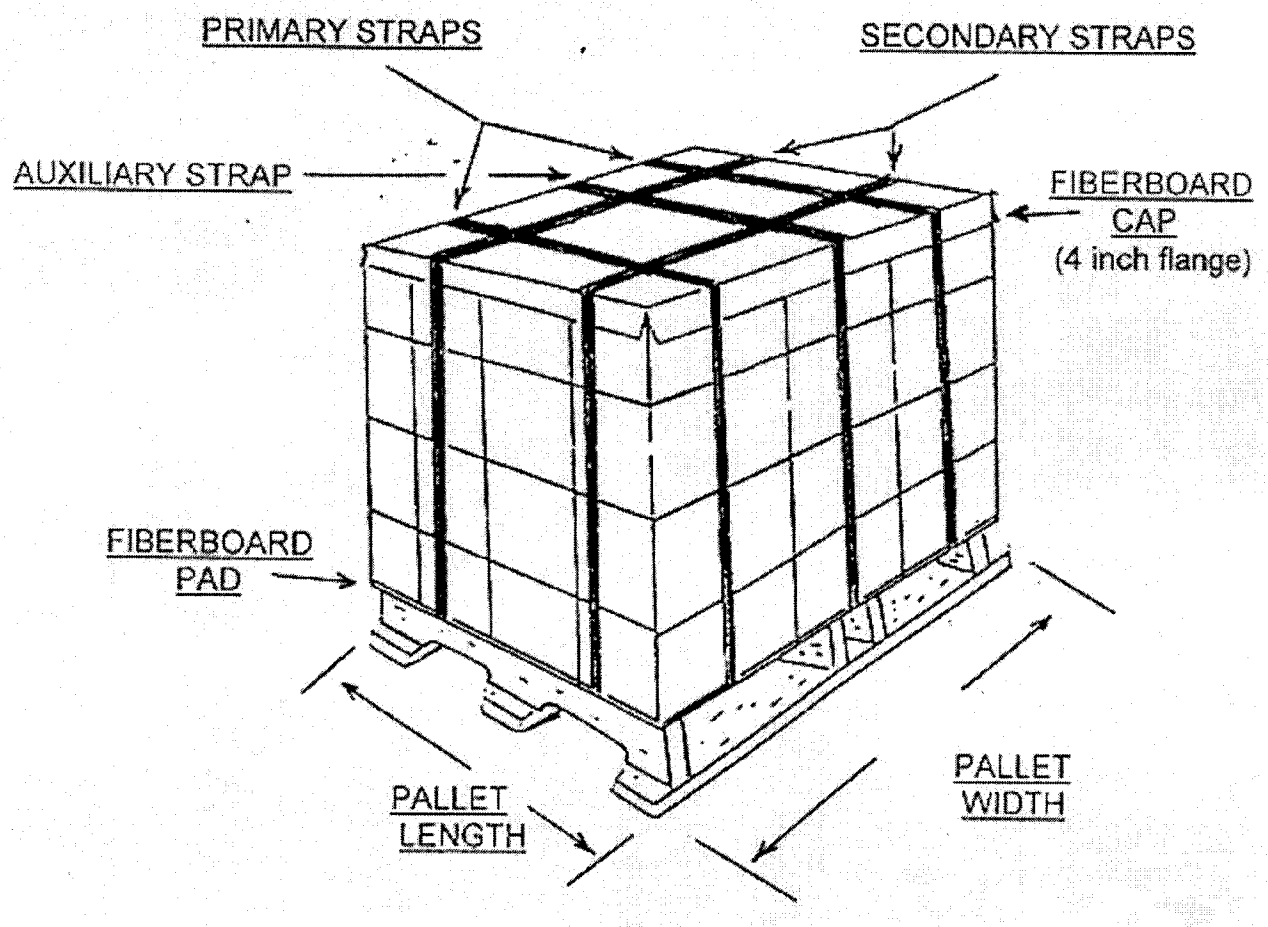


*TYPE I. CLASS B UNIT LOAD*

NOTE: Nonmetallic Strapping Only

**FIGURE 2**

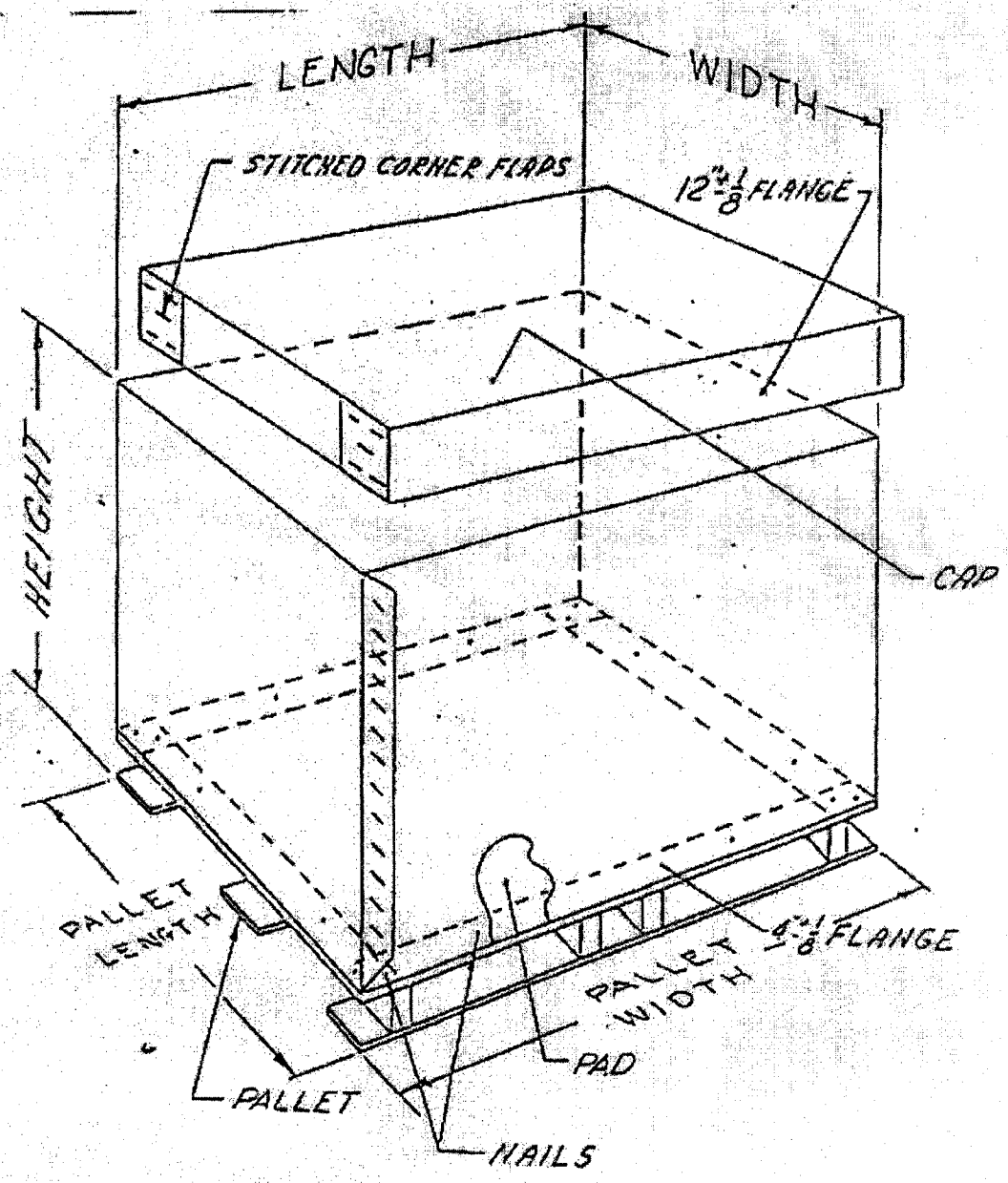


FIGURE 3 TYPE II, CLASS E LOADS, CORRUGATED TRIPLE WALL FIBERBOARD TUBE WITH CAP, STRAPPING AND PALLET BASE

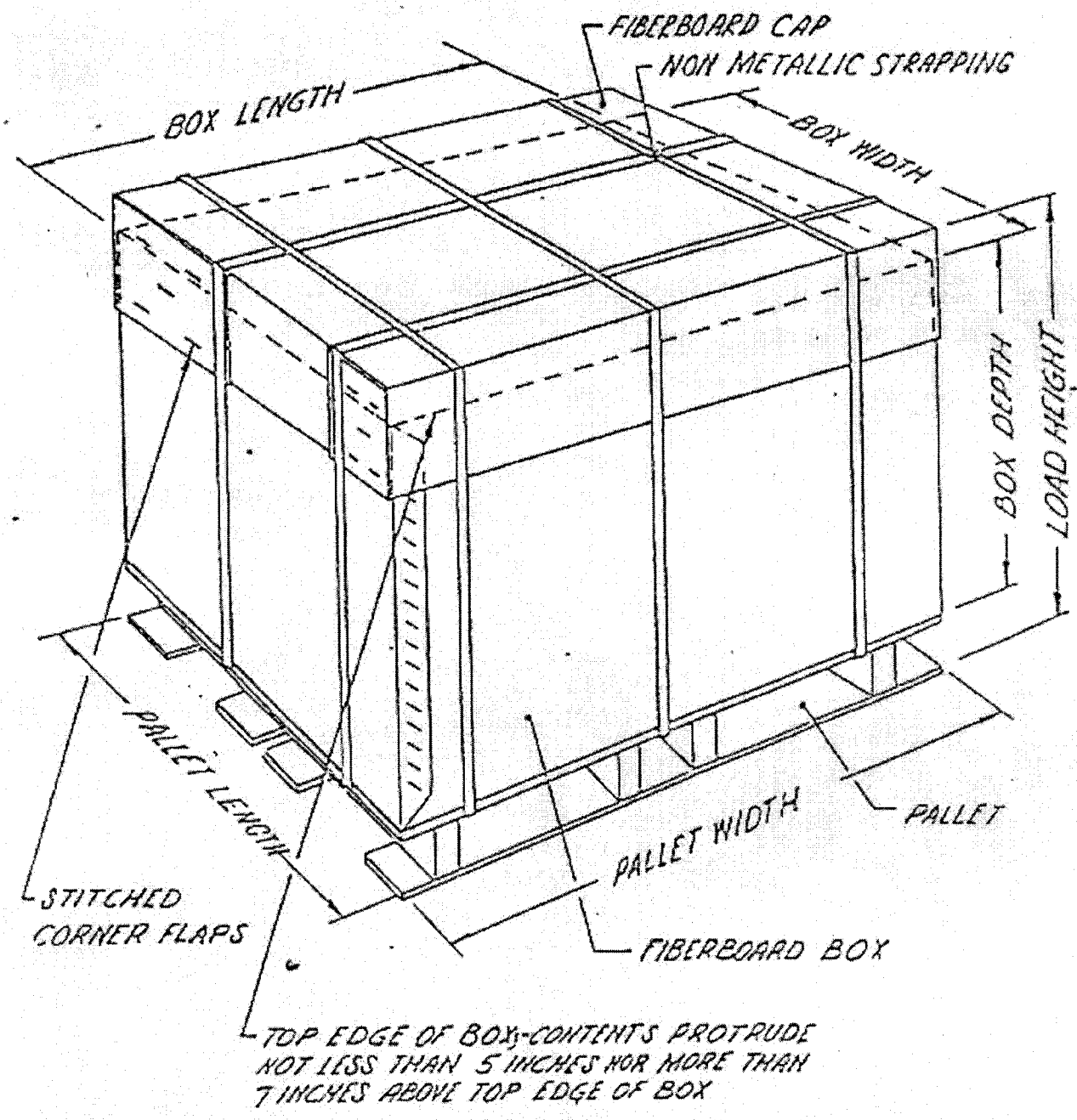


FIGURE 4 TYPE II, CLASS E
ASSEMBLED LOADS, CAPPED AND STRAPPED

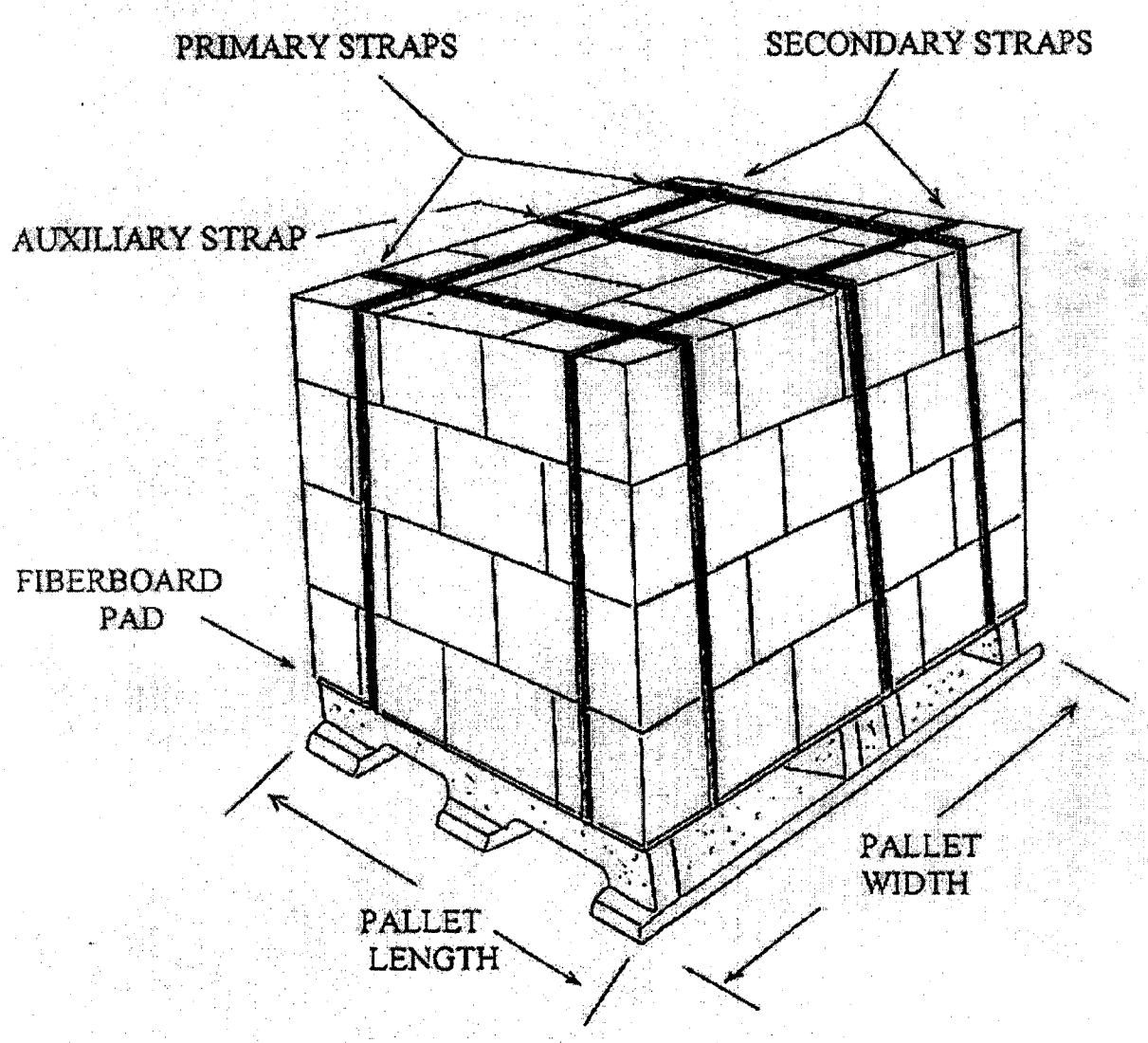


*TYPE III, CLASS G UNIT LOAD*

**FIGURE 5**